Product information

Drummotors

TM 113B25



Van der Graaf

Power Transmission Equipment

www.vandergraafpte.nl

The TM 113's playground







TM 113B25

A wide range of applications

4 Introduction
5 Selection table
6 Dimensions Drummotor mild steel
Dimensions Taildrum mild steel
7 Dimensions Drummotor stainless steel
Dimensions Taildrum stainless steel
8 Dimensions bracket / Cable exit
9 Cross sectional / parts description
12 Options
15 Product range
16 Contact us

Van der Graaf has achieved a prominent position on both the domestic and international market with its “GV” Drummotors. The “GV” Drummotor has found success in a wide range of applications including the following: automotive, X-ray, construction, postal, courier, mining, aggregate, airline baggage, package fl ow, tyre manufacturing, fi sh processing, poultry processing, meat processing, agriculture, fruit and vegetable, farming, forestry, baking, dairy and many more.

Copyright © 2010 Van der Graaf B.V.
All Rights Reserved. Modifi cations and errors excepted.

Selection table

TYPE TM 113B25	Power kW	Beltspeed m/s at 50 Hz Beltpull N										Min. L mm Design B	Full load curr. 400 V - 50 Hz I = ... A	Weight kg L=350
275 Z	0,55	4,40 120	4,00 130	3,20 165	2,80 185	2,50 210	2,20 240	1,90 270				310	1,20	16
205 Z	0,37	4,40 80	4.00 90	3,20 110	2,80 125	2,50 140						310	0,80	16
405 Z 405 PL2	0,37	2,2 16 0 0	2,0 17 0 5	1,6 22 0 0	1,4 25 0 0	1,2 28 5 0	1,1 32 0 0	0,9 37 5 0	0,7 470 5 100	0,6 585 0 115		360	1,35	16
234 Z	0,25	0,8 40 4,40 555 0	0,7 48 4,00 660 5	0,6 52 3,20 575 5	0,5 62 2,80 585 0	0,5 68 2,50 095 0	0,4 75 5 5	0,4 85 0 0	0,3 0 4	0,2 0 7		260	0,65	16
434 Z 434 PL2	0,25	2,2 11 0 0	2,0 12 0 0	1,6 15 0 0	1,4 17 0 0	1,2 19 5 0	1,1 21 0 5	0,9 25 5 0	0,40 575	0,34 675	0,27 850	310	0,70	16
634 Z 634 PL2	0,25	0,8 27 1,0 524 0 0	0,7 30 0,9 526 5 0	0,7 33 0,8 095 0 0	0,6 35 0,7 540 5 0	0,5 42 0,60 595 0	0,5 46 0,50 475 0	0,4 51 0,40 595 0				360	0,95	16
425 Z 425 PL2 425 PL3	0,18	0,2 79 1,6 910 5 0 5 0,8 19 5	0,2 92 1,4 512 0 0 0,7 22 5	0,2 5 1,2 113 5 5 0,7 23 5	0,1 0 1,1 755 0 255 0,6 115 5	0,9 180 5 300 0,5 115 5	0,50 330	0,45 370	0,40 415	0,34 485	0,27 615	27 5 27 5	0,55	16
625 Z 625 PL2	0,18	0,9 0,2 79 0 0 0 0,2 66 1,1 510 0 5 0,8 13 5	0,8 0,1 88 0 8 0 0,2 79 0,9 112 0 5 0,7 14 5	0,7 0,1 99 0 6 0 0,1 97 7 5 0,7 160 0 115 0,0	0,60 0,1 285 3	0,1 1						31 310 0	0,65	16
416 Z 416 PL2 416 PL3	0,12	0,3 0,1 58 1 805 5	0,2 0,1 96 2 115 0	0,20 7 550	0,65 170	0,55 200	0,50 220	0,45 245	0,40 275	0,34 325	0,27 410	26 0 26 0	0,40	16
816 PL2	0,12	0,3 0,1 58 1 805 5	0,2 0,1 96 2 115 0	0,20 7 550	0,16 690	0,13 850						31 31 0 0	0,65	16
816 811 PL3 PL2	0,08	0,1 5 0,3 23 1 5	0,0 0 0,2 28 6 5	0,2 335 2 100	0,2 370 0 115	0,1 460 6 115	0,13 565					36 26 0 0	0,45	16
811 807 PL3 PL3	0,05	0,1 70 0,06 035 0 5 0,02 115 5	0,0 88 0,05 880 0 0,02 115 3	0,0 5 0,03 715 3 0 0,02 115 1	0,0 0 6 0,019 1150	0,0 0 5 0,016 1150	0,015 1150	0,013 1150	0,012 1150	0,010 1150	0,008 1150	31 31 0 0	0,30	16
807 805 PL3 PL4	0,04	0,10 350	0,08 440	0,07 1505 0	0,06 585	0,05 705	0,033 1065					36 285 0	0,25	16

Available standard facewidth's: 260 - 275 - 310 - 360 - 410 - 460 - 510 - 560 - 610 - 660 - 710 - 760 - 810 - 860 mm When an electro-mechanical brake is fitted, the minimum facewidth is increased by 75 mm
The total weight of a Drummotor grows approx. 1,8 kg per 100 mm
Maximum beltpull: 1150 N (Imax on request or on data plate)
Available torque: (Beltpull N x drum diameter m) / 2 Nm

Dimensions mild steel

TM 113B25

TM 113B25, mild steel Drummotor with polyamide junctionbox

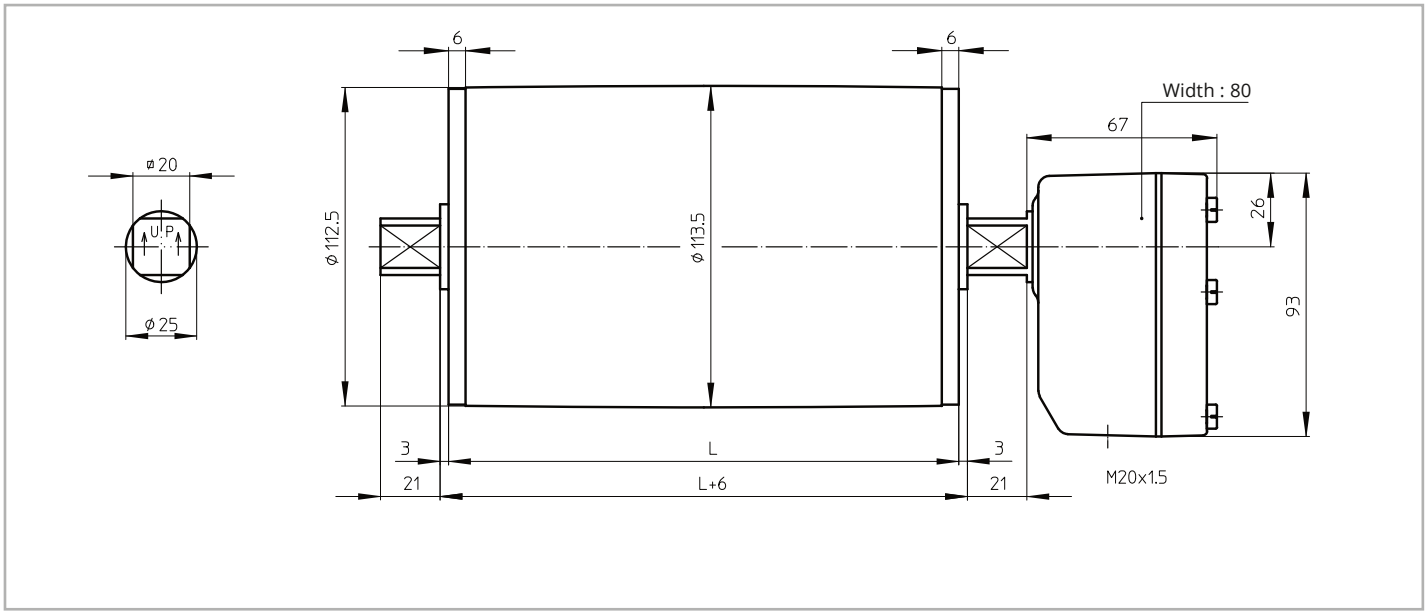

KT 113B25

KT 113B25, mild steel Taildrum

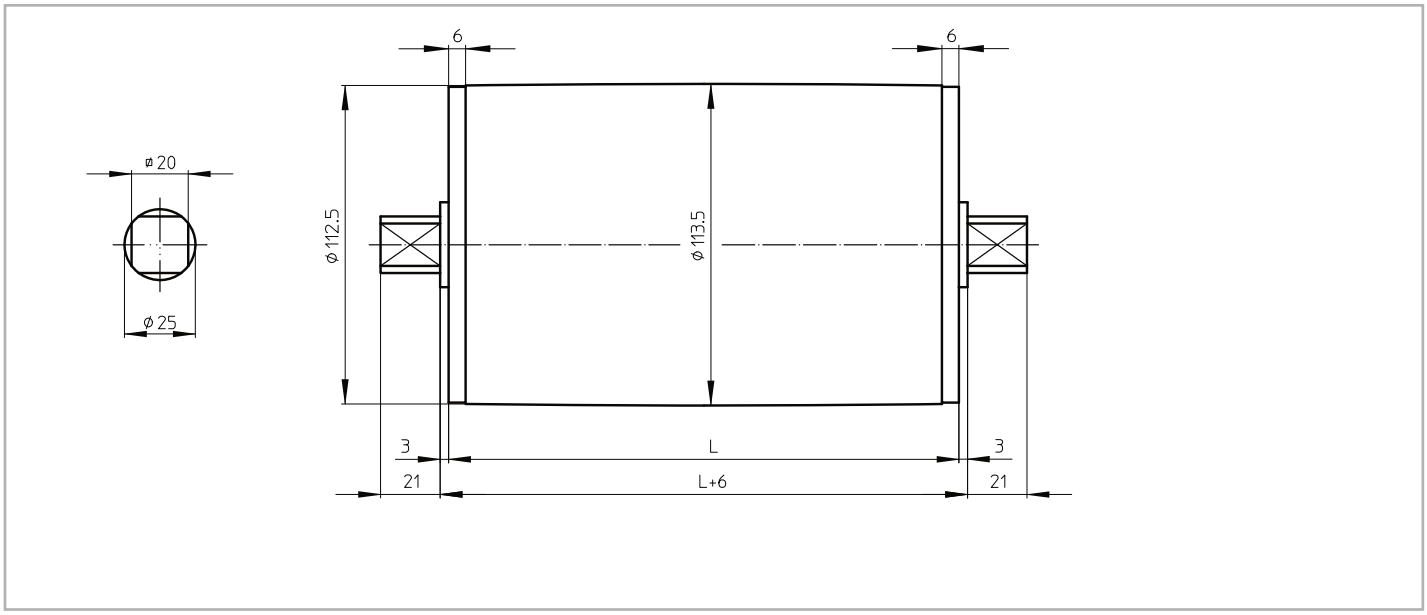

TM 113B25 CR

TM 113B25 CR, stainless steel Drummotor with polyamide junctionbox and CR sealing

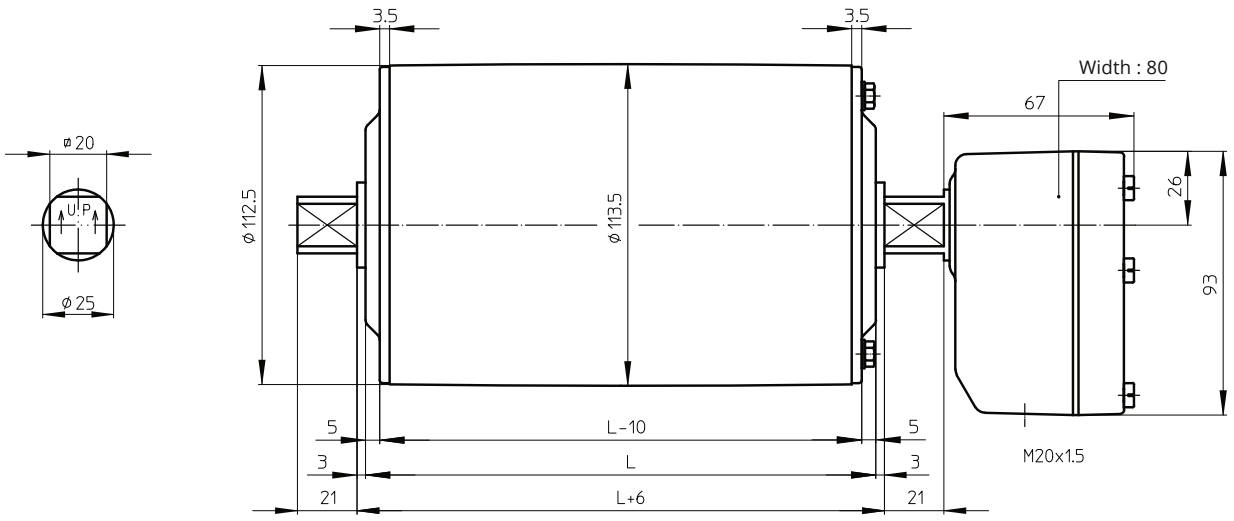

KT 113B25 CR

KT 113B25 CR, stainless steel Taildrum with CR sealing

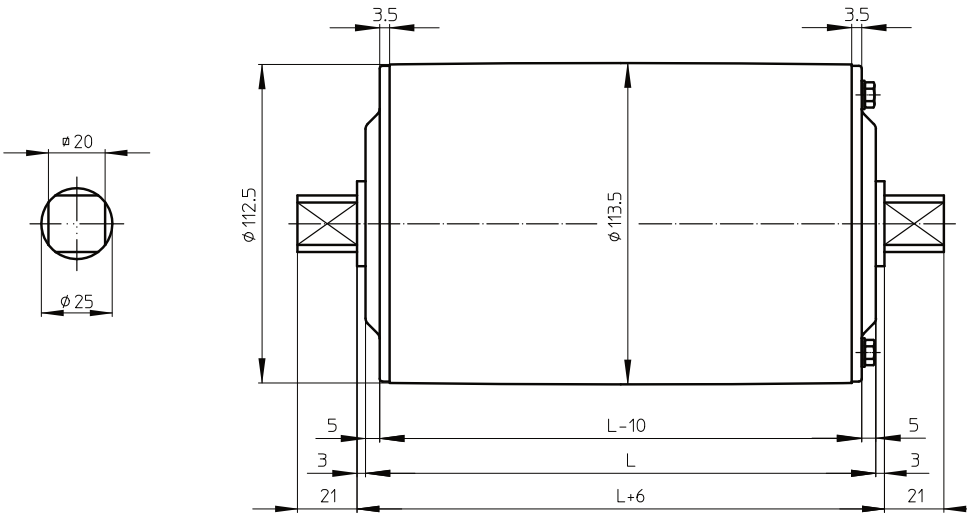

Dimensions bracket / cable exit

AB 20

AB 20, cast iron or stainless steel bracket Weight: 0,6 kg per pair

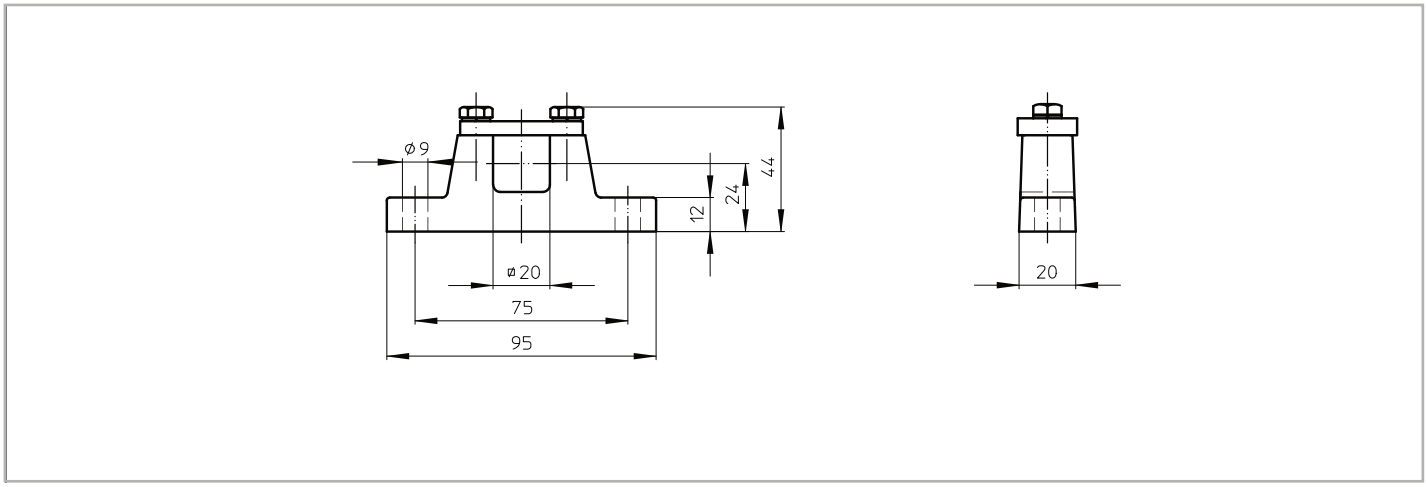

Standard design of a TM 113B25 is with a polyamide junctionbox. For stainless steel design, this can be either a polyamide or stainless steel junctionbox.

On request a Drummotor can be fitted with a cable. In this case it is important to know the available voltage (preferably 1 voltage), the length of the cable, whether the cable is shielded or not and the type of cable exit. An overview of available cable exits is shown below.

Option 1

Straight cable exit with cable gland

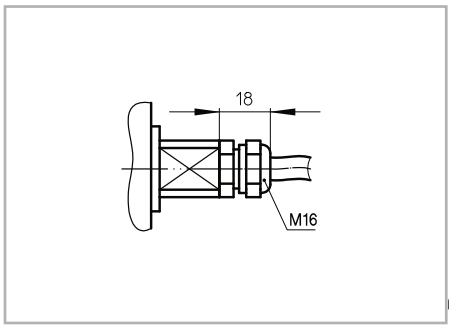

Option 3

Elbow cable exit with cable gland
(minimum facewidth increases with 25 mm)

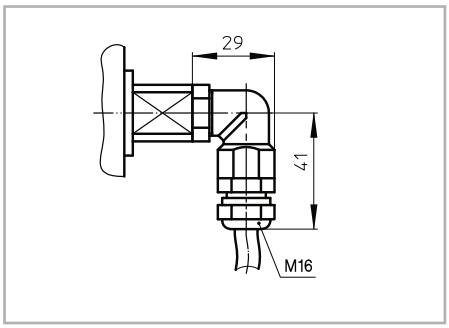

Option 4

Open cable exit (minimum facewidth increases with 25 mm)

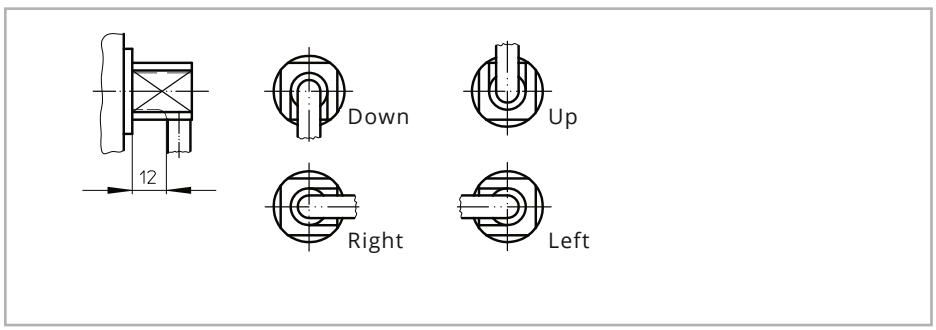

TM 113B25 Z

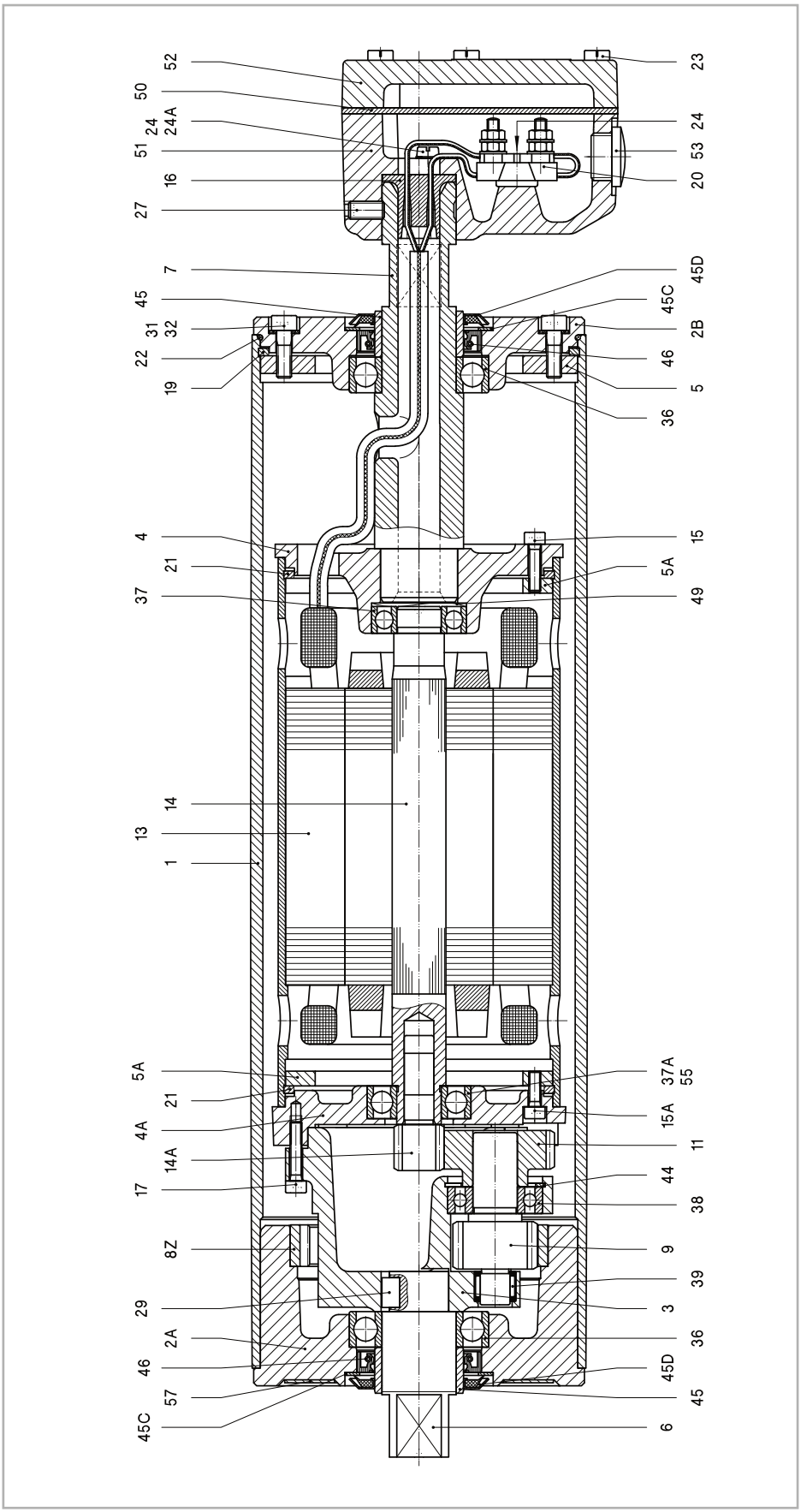

Legenda

1	Shell	8Z	Internal gear	19	Springring
2A	Endflange	9	Pinion	20	Terminalboard
2B	Endflange	11	Gear	21	Springring
3	Gearhousing	13	Stator	22	O-ring
4	Motorflange	14	Rotor	23	Cyl. head screw
4A	Motorflange	14A	Insert pinion	24	Cyl. head screw
5	Mountingring	15	Int. hex screw		washer
	Mountingring	15A	Int. hex screw	27	Setscrew
	Shaftend	16	Cable passage	29	Key
7	Hollow shaft		hex screw	31	Int. hex screw

32	Washer	46	Oilseal
36	Needlebearing	49	Wave washer
37	Ballbearing	50	Seal
38	Ballbearing	51	Junctionbox
39	Ballbearing	52	Junctionbox cover
44	Toothed lock	53	Stopping plug
	17 Int.	55	Ballbearing incl.
45	45D Gammaring		backstop
45C	Shim plated	57	Dataplate
45D			

Cross sectional / parts description

TM 113B25 PL2

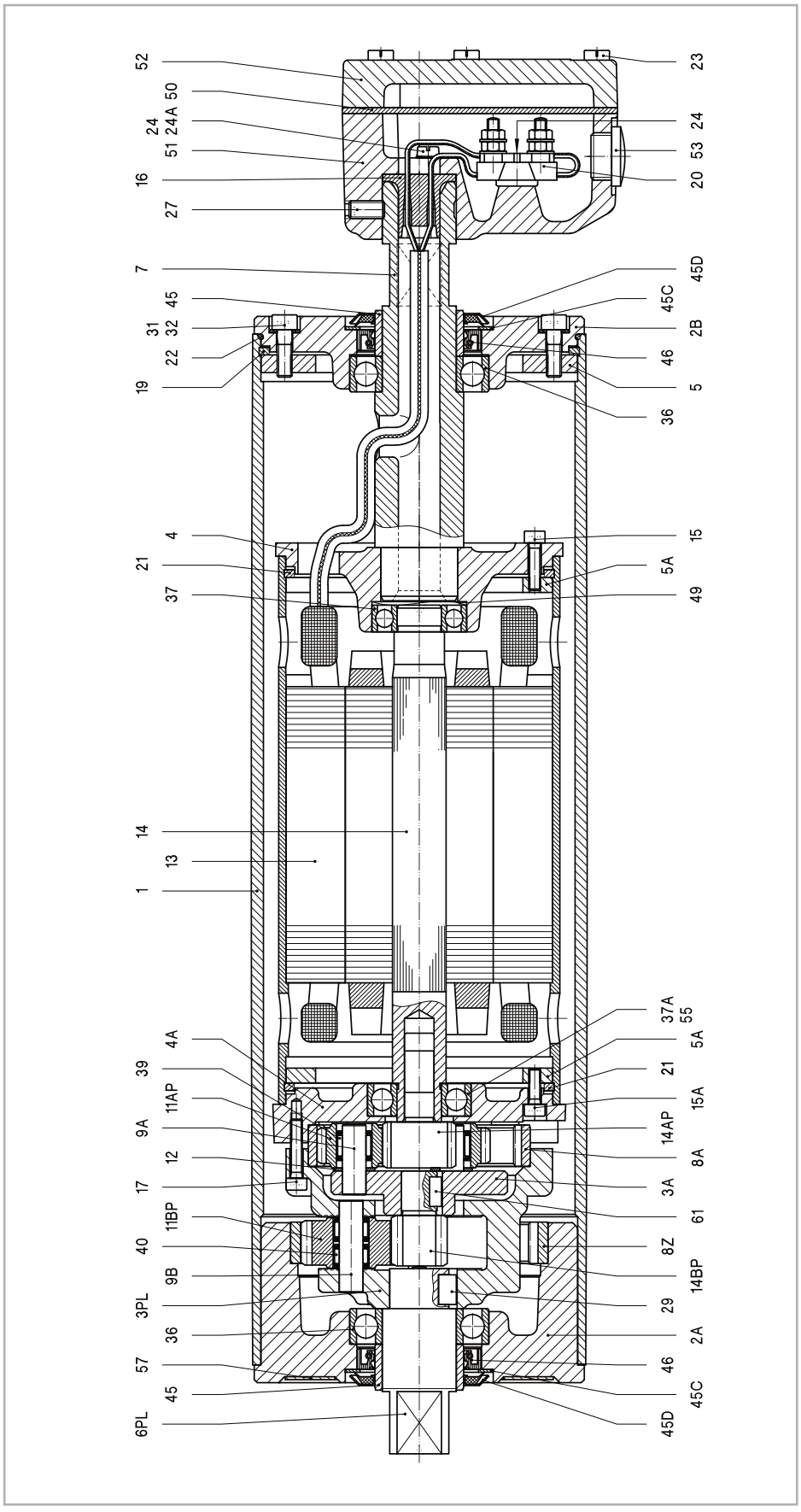

Legenda

1 Shell
2A Endflange
2B Endflange
3A Planetary housing 3PL
Planetary carrier
4 Motorflange
4A Motorflange
5 Mountingring
5A Mountingring
6PL Shaftend
7 Hollow shaft
8Z Internal gear
8A Internal gear
9A Cylindrical pin
9B Cylindrical pin
11AP Planetary gear
11BP Planetary gear 12
Shim
13 Stator
14 Rotor
14AP Insert pinion
14BP Sunwheel
15 Int. hex screw27 Setscrew
15A Int. hex screw29 Key
16 Cable passage31 Int. hex screw
17 Int. hex screw32 Washer
19 Springring36 Ballbearing
20 Terminalboard37 Ballbearing
21 Springring37A Ballbearing
22 O-ring39 Neadlebearing 23 Cyl. head screw40
Neadlebearing 24 Cyl. head screw45 Bearing race
24A Toothed lock washer45C Shim plated
45D Gammaring
46 Oilseal
49 Wave washer
50 Seal
51 Junctionbox
52 Junctionbox cover 53
Stopping plug
55 Ballbearing incl.
backstop
57 Dataplate
61 Key

KT 113B25

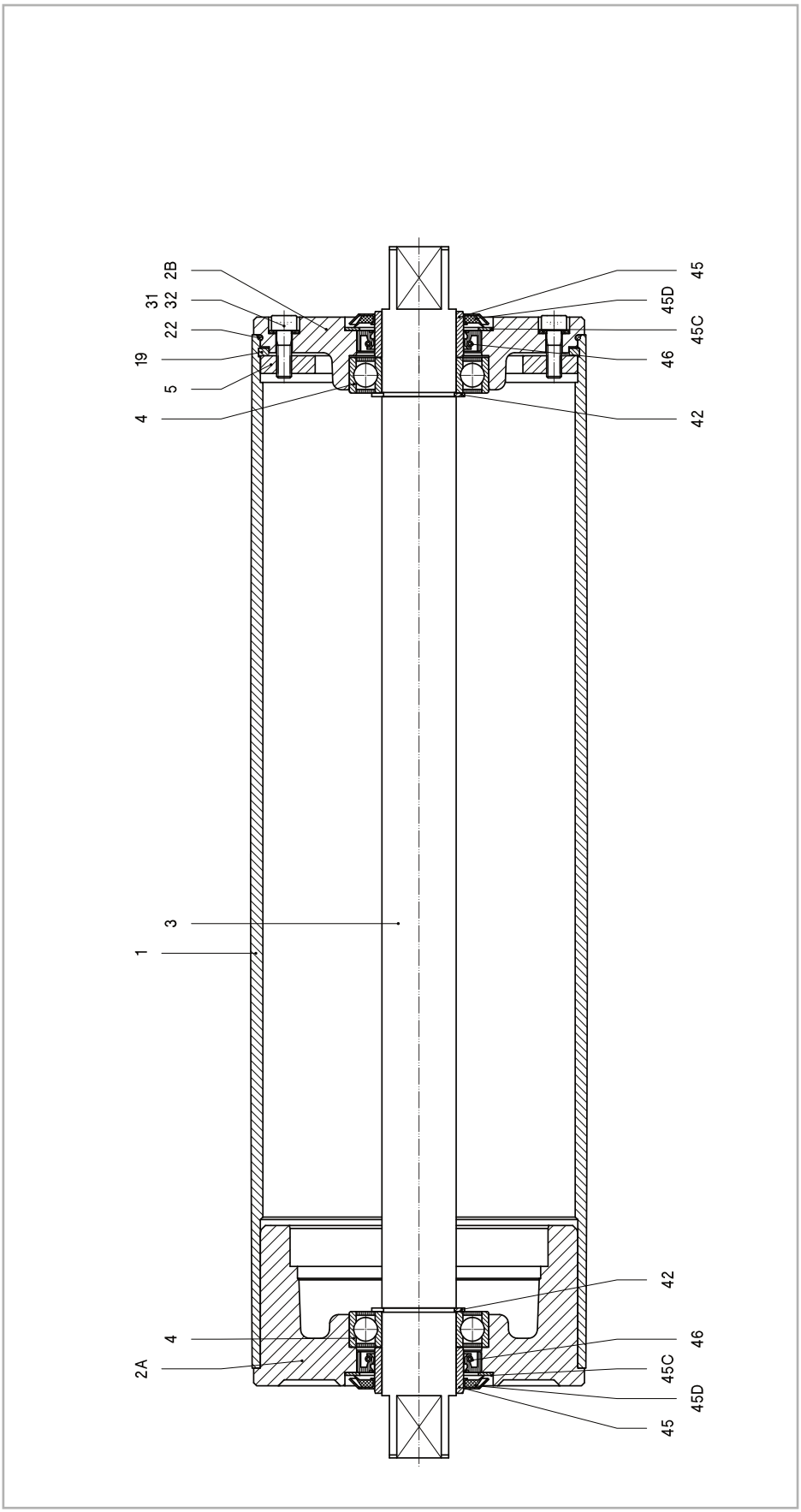

Legenda

1 Shell
2A Endflange
2B Endflange
3 Shaft
4 Ballbearing
5 Mountingring
19 Springring
22 O-ring
31 Int. hex screw
32 Washer
42 Circlip
45 Bearing race
45C Shim plated
45D Gammaring
46 Oilseal

Material

The external parts of the Drummotor are made from mild steel and cast iron. Depending on the application it is also possible to manufacture in stainless steel (complete or part). You can choose between stainless steel 304 (general food industry) and stainless steel 316 (salt water applications).

Backstop - Brake

If an inclined belt conveyor is stopped fully loaded, it could run backwards.

To prevent this we can install a backstop. One of the bearings in the Drummotor is replaced by a one way bearing. The way this bearing is installed determines the direction of rotation of the drum. TBRH indicates a cw rotation and TBLH ccw.

In situations where a Drummotor needs to be able to drive in both directions it is not possible to use a backstop. In this case we use a brake. When an declined belt or a horizontal belt needs to be stopped quickly to pick or place items a brake is the best solution.

Inclined position

Sometimes a Drummotor needs to be installed on an inclined or even vertical position. This is possible, but we need to make adjustments to the oil level in the drum as the oil will flow to the lower side of the Drummotor causing the top bearing to run without lubrication. To prevent problems we will need to know the installation angle so we can fill the drum with extra oil and fit a double sealed bearing on the upper side.

Thermal protection

A Van der Graaf Drummotor can be fitted with thermal protection. This consists of either a thermistor (PTC) or bi-metal (klixon). We install these on each phase of the electric motor.

Encoder - Sensor bearing

In certain applications it is required to measure the speed or position of a conveyor belt. For this type of application we can install an encoder or sensor bearing to accurately measure rotational speed of the Drummotor.

The accuracy needed will determine the type of encoder or sensor used.

Lagging

The power produced by the Drummotor has to be transferred to the belt and lagging is used to give more friction between the Drummotor and the conveyor belt. Van der Graaf can fit your Drummotor with different kinds of lagging.

There is a difference between cold and hot vulcanised lagging. Cold vulcanised means the lagging is glued to the Drummotor usually in sheet form and the join ‘welded’ together. Hot vulcanising is a process where the shell is wrapped around with thin layers of rubber. The shell with the rubber is then baked in an autoclave fusing the layers together creating a seamless finish.

It is possible to cut grooves (e.g chevron or diamond) in the lagging.

Sprockets

Do you wish to use a Drummotor to drive modular belts? Van der Graaf can help you! Fitting sprockets suitable for various types of modular belts is a simple solution. The Drummotor is manufactured with a cylindrical shell and machined with a patented ‘keying’ system. The sprockets are simply ‘slid’ on and locked securely into position.

Sealings for mild steel Drummotors and Taildrums

RB sealing - IP 66



This is Van der Graaf's standard sealing. This type of sealing will work in most conditions.

RBS sealing - IP 66



This sealing is specifically designed for those applications where high water pressure is used for cleaning.

HD sealing - IP 66



This sealing is designed for abrasive applications, like sand, gravel and soil.

Sealings for stainless steel Drummotors and Taildrums

CR sealing - IP 66



This is our standard sealing for stainless steel Drummotors, a very effective, multi labyrinth sealing.

UW sealing - IP 68



This sealing is suitable for under water applications. The maximum depth is approx 2,5 m.

Options

Specification	Standard	Optional
Construction		
Shafts and bolts	Mild steel	Stainless steel
Endflanges	Cast iron	Stainless steel
Shell	Mild steel	Stainless steel
Junctionbox	Polyamide	Cast iron or stainless steel
Cable		Shielded or non-shielded
Sealing mild steel	RB	RBS, HD
Sealing stainless steel	CR	UW
Shell		
Crowned	•	
Cylindrical		•
Balanced		•
Lagging, cold vulcanised		•
Lagging, hot vulcanised		•
Lagging, FDA approved		•
Fitted with grooves, patterns		•
Sprockets		•
Electro motor		
Three-phase asynchronous	•	
Power supply		
Single phase (230 V - 50 Hz)	230/400 V - 50 Hz	Other voltages and frequencies on request
		•
Insulation class	F	H
Thermal protection		Bi-metal or thermistor
Run by frequency inverter	•	
Other options		
Food grade oil		•
Backstop, mechanical		•
Brake, electro mechanical		•
Clutch brake, electro mechanical		•
Inclined or vertical position		•
Other facewidth's		•
Different shaft designs		•
Encoder or sensor bearing in drum motor		Sensor bearing
Encoder or sensor bearing in tail drum		•
Certificates		
CE	•	
UL		•
CSA		•
ATEX zone 22, dust		•
UW Under water application (IP68)		•

Our products, an overview

Drummotor type	TM	TM	TM 127.25	TM 138.25	TM 160.25	TM 160.30	TM 215.30	TM 215.40
Drum diameter (mm)	100B25	113B25	127	138	160	160	215	215
Shaft diameter (mm)	100	113	25	25	25	30	30	40
Power (kW)	25	25	0.10-1.1	0.10-1.1	0.10-0.75	0.10-2.2	0.10-2.2	0.37-5.5
Speed (m/s)	0.05-0.37	0.04-0.55	0.008-2.60	0.009-2.80	0.13-3.30	0.06-4.00	0.08-5.30	0.12-4.70
	0.007-3.60	0.008-4.40						

Drummotor type	TM 215B50	TM 273.40	TM 315.40	TM 315.50	TM 400.50	TM 400.60	TM 500.60	TM 500A75
Drum diameter (mm)	215	273	315	315	400	400	500	500
Shaft diameter (mm)	50	40	40	50	50	60	60	75
Power (kW)	1.5-4.0	0.37-5.5	0.37-5.5	1.1-11	1.1-11	1.5-22	1.5-22	11-30
Speed (m/s)	0.18-0.31	0.16-4.95	0.18-5.20	0.16-4.40	0.20-4.80	0.20-4.60	0.25-4.70	0.80-3.20

Drummotor type	TM 620A75	TM 630A100	TM 800A100	TM 800A130
Drum diameter (mm)	620	630	800	800
Shaft diameter (mm)	75	100	100	130
Power (kW)	11-30	22-55	22-55	55-132
Speed (m/s)	1.00-3.90	1.00-4.00	1.25-5.10	1.60-4.50



Design benefi ts

- Robust, industrial design
- Fully enclosed
- Oil fi lled
- Well-sized gears and bearings

Installation advantages

- Easy to install
- Compact and reliable
- Easy to clean
- Virtually maintenance free
- Low Life Cycle Costs

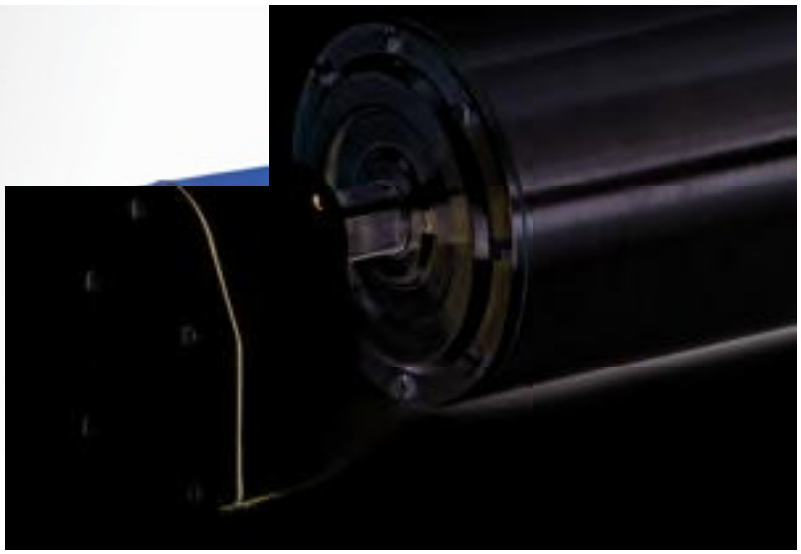

Van der Graaf

Power Transmission Equipment

Contact us

Netherlands
Van der Graaf B.V.
De Weijert 14
P.O. Box 3
8325 ZG Vollenhove
Tel: 00 31 527 241441
Fax: 00 31 527 241488
E-mail: info@vandergraafpte.nl
www.vandergraafpte.nl



Canada
Van der Graaf Inc.
2 Van der Graaf Court
Brampton
Ontario L6T 5R6
Tel: 0 0 1 905 793 8100
Fax: 00 1 905 793 812
E-mail: info@vandergraaf.com
www.vandergraaf.com



Great Britain
Van der Graaf U.K. Ltd.
Unit 23, The Metro Centre
Welbeck Way Woodston
Peterborough PE2 7UH
Tel: 00 44 1733 391777
Fax: 00 44 1733 391044
E-mail: sales@vandergraaf.co.uk
www.drummotor.com

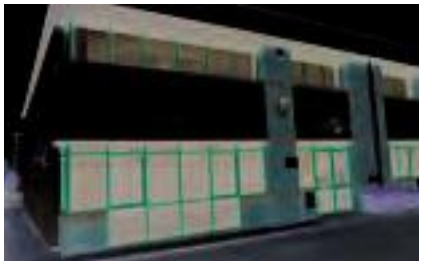

USA
Van der Graaf Corp.
51515 Celeste
Shelby Township
48315 Michigan
Tel: 0 0 1 866 595 3292 Fax:
00 1 888 326 0089



Germany
Van der Graaf GmbH
Rheiner Straße 24 B
48432 Rheine-Mesum
Tel: 00 49 5975 306210
Fax: 00 49 5975 3062120
E-mail: info@vandergraaf.de
www.vandergraaf.de



Sweden
Van der Graaf Scandinavia AB
Spinngatan 2
267 73 Billesholm
Tel: 00 46 42 22 0802 Fax: 00
46 42 22 0803 E-mail:
info@vandergraaf.se
www.vandergraaf.se



Finland
Van der Graaf Scandinavia AB
Tel: 00 358 400 419063
E-mail: info@vandergraaf.fi
www.vandergraaf.fi

ROI
Via 4 Novembre 12/4, 40033, Casalecchio di Reno (BO) ITALIA
Tel:+39.051.592.349 Fax:+39.051.592.352 Email: info@roi-srl.it
www.roi-srl.it