Product information

Drummotors

TM 273-40



Van der Graaf

Power Transmission Equipment

www.vandergraafpte.nl




The TM 273's
playground



TM 273-40

A wide range of applications

Van der Graaf has achieved a prominent position on both the domestic and international market with its “GV” Drummotors. The “GV” Drummotor has found success in a wide range of applications including the following: automotive, X-ray, construction, postal, courier, mining, aggregate, airline baggage, package fl ow, tyre manufacturing, fi sh processing, poultry processing, meat processing, agriculture, fruit and vegetable, farming, forestry, baking, dairy and many more.

4 Introduction
5 Selection table
6 Selection table Dahlander motors
7 Dimensions Drummotors
8 Dimensions Taildrums
9 Dimensions bracket
10 Cable exit
11 Cross sectional / parts description
14 Options
17 Product range
18 Notes
20 Contact us

Selection table

TYPE TM 273.40	Power kW	Beltspeed m/s at 50 Hz Beltpull N										Min. L mm Design A	Min. L mm Design B	Full load curr. 400 V - 50 Hz I = ... A	Weight kg L=600
275 275 Z 275 ZV	5,50	5,00 *1045* 2,50 *2090* 2,20 *2375*	4,40 *1190* 2,00 *2615*	3,60 *1450* 1,80 *2905*	3,20 *1635* 1,70 *3075*	1,40 *3730*	1,30 *4020*	1,20 *4355*				*500*	*550*	*11,0*	*102*
255 255 Z 255 ZV	4,00	5,00 *760* 2,50 *1520* 1,40 *2715*	4,40 *865* 2,20 *1725* 1,30 *2925*	3,60 *1055* 2,00 *1900* 1,20 *3165*	3,20 *119* 1,80 *0* *211*	1,70 *2235*						*500*	*550*	*8,0*	*97*
440 440 Z 440 ZV	3,00	3,70 *770* 1,25 *2280* 1,10 *2590*	3,00 *950* 1,00 *2850*	2,50 *1140* 0,90 *3165*	2,20 *1295* 0,85 *3355*	1,80 *1585*	1,60 *1780*					*500*	*550*	*6,6*	*97*
430 430 Z 430 ZV	2,20	3,70 *565* 1,00 *2090* 0,85 *2460*	3,00 *695* 0,90 *2320* 0,75 *2785*	2,60 *805* 0,70 *2985*	2,10 *995* 0,65 *3215*	1,80 *1160* 0,60 *3485*	1,60 *1305*	1,25 *1670*	1,10 *1900*			*500*	*500*	*4,7*	*97*
420 420 Z 420 ZV	1,50	3,70 *385* 0,75 *1900* 0,60 *2375*	3,00 *475* 0,70 *2035* 0,55 *2590*	2,60 *550* 0,65 *2190* 0,50 *2850*	2,10 *680*	1,80 *790*	1,60 *890*	1,25 *1140*	1,10 *1295*	1,00 *1425*	0,85 *1675*	*500*	*500*	*3,6*	*92*
620 ZV	1,50	0,45 *3165*	0,40 *3565*	0,35 *4070*								*500*	*550*	*3,7*	*97*
415 415 Z	1,10	3,70 *280* 0 *139* 0,75 *5* *149*	3,00 *350* 0,65 *1610*	2,60 *400* 0,60 *1740*	2,10 *500* 0,55 *1900*	1,80 *580* 0,50 *2090*	1,60 *655*	1,25 *835*	1,10 *950*	1,00 *1045*	0,85 *1230*	*500*	*500*	*2,9*	*87*
615 Z 615 ZV	1,10	0,45 *232* 0,75 *5* 0 *261*	0,35 *2985*	0,33 *3165*								*500*	*500*	*2,9*	*92*
610 610 Z	0,75	1,70 *420* 0 *158*	1,40 *510* 0 *178*	1,15 *620* 0 *203*	1,05 *680* 0 *216*	0,85 *840*	0,75 *950*	0,65 *1095*	0,55 *1295*	0,50 *1425*		*500*	*500*	*2,5*	*92*
810 ZV	0,75	0,45 *2375* 0,305	0,40 *2640* 0,270	0,35 *2850* 0,255	0,33 *0* 3							*500*	*500*	*2,7*	*92*
675 675 Z	0,55	1,70 *305* 0 *116*	1,40 *375* 0 *130*	1,15 *455* 0 *149*	1,05 *500* 0 *158*	0,85 *615*	0,75 *695*	0,65 *805*	0,55 *950*	0,50 *1045*		*500*	*500*	*1,9*	*87*
875 Z	0,55	0,45 *1740* 0,305	0,40 *1935* 0,270	0,35 *2090* 0,255	0,33 *5* 3							*500*	*500*	*2,2*	*92*
1275 ZV	0,55	0,23 *2270*	0,20 *2615*	0,17 *3075*								*500*	*550*	*2,6*	*97*
805 805 Z	0,37	1,30 *270* 0 *100*	1,10 *320* 0 *110*	0,90 *390* 0 *117*	0,80 *440* 0 *130*	0,65 *540* 0 *140*	0,55 *640*	0,50 *705*	0,45 *780*	0,40 *880*		*500*	*500*	*1,8*	*87*
1205 1205 Z	0,37	0,35 *500* 0 *153* 0,23	0,32 *0* 0,20 *1760*	0,30 *0* 0,17 *2070*	0,27 *0* 0,25							*500*	*500*	*2,0*	*92*

Available standard facewidth's: 500 - 550 - 600 - 650 - 700 - 750 - 800 - 850 - 900 - 950 - 1000 - 1050 - 1100 - 1150 mm
When an electro-mechanical brake is fitted, the minimum facewidth is increased by 100 mm
The total weight of a Drummotor grows approx. 6 kg per 100 mm
Available torque: (Beltpull N x drum diameter m) / 2 Nm

Selection table Dahlander motors

TYPE TM 273.40	Power kW	Beltspeed m/s at 50 Hz Beltpull N								Min. L mm Design A	Min. L mm Design B	Full load curr. 400 V - 50 Hz I = ... A	Weight kg L=600
430/240 430/240 Z 430/240 ZV	2,20/3,00	**2,60/5,20** *805/550* **0,90/1,80** *2320/1585* **0,85/1,70** *2460/1675*	**2,10/4,20** *995/680* **0,75/1,50** *2785/1900*	**1,80/3,60** *1160/790* **0,70/1,40** *2985/2035*	**1,60/3,20** *1305/890* **0,65/1,30** *3215/2190*	**1,25/2,50** *1670/1140* **0,60/1,20** *3485/2375*	**1,10/2,20** *1900/1295*			*500*	*550*	*5,0/6,9*	*97*
418/230 418/230 Z 418/230 ZV	1,30/2,20	**2,60/5,20** *475/400* **0,75/1,50** *1645/1395* **0,70/1,40** *1765/1495* **0,50/1,00** *2470/2090*	**2,10/4,20** *590/500* **0,65/1,30** *1900/1610*	**1,80/3,60** *685/580* **0,60/1,20** *2060/1740*	**1,60/3,20** *770/655*	**1,25/2,50** *990/835*	**1,10/2,20** *1125/950*	**1,00/2,00** *1235/1045*	**0,85/1,70** *1455/1230*	*500*	*500*	*3,1/4,6*	*97*
816/430 ZV	1,20/2,20	**0,45/0,90** *2535/2320*	**0,40/0,80** *2850/2615*	**0,35/0,70** *3255/2985*	**0,33/0,66** *3455/3165*	**0,30/0,60** *3800/3485*				*500*	*550*	*3,8/4,3*	*97*
810/420 810/420 Z 810/420 ZV	0,75/1,50	**1,85/3,70** *385* **0,50/1,00** *1425* **0,40/0,80** *1780* **0,30/0,60** *2375*	**1,50/3,00** *475* **0,45/0,90** *1585* **0,35/0,70** *2035* **0,27/0,54** *2640*	**1,30/2,60** *550* **0,33/0,66** *2160* **0,25/0,50** *2850*	**1,05/2,10** *680*	**0,90/1,80** *790*	**0,80/1,60** *890*	**0,65/1,30** *1095*	**0,55/1,10** *1295*	*500*	*550*	*3,3/4,6*	*97*
875/415 875/415 Z	0,55/1,10	**1,30/2,60** *400* **0,40/0,80** *1305* **0,35/0,70** *1495* **1,30/2,60**	**1,05/2,10** *500* **0,33/0,66** *1585*	**0,90/1,80** *580* **0,30/0,60** *1740*	**0,80/1,60** *655* **0,27/0,54** *1935*	**0,65/1,30** *805* **0,25/0,50** *2090*	**0,55/1,10** *950*	**0,50/1,00** *1045*	**0,45/0,90** *1160*	*500*	*500*	*2,4/2,5*	*92*
805/410 805/410 Z	0,37/0,75	**0,40/0,80** **0,35/0,70** *102* *0*	**1,05/2,10** *340* **0,33/0,66** *1080*	**0,90/1,80** *395* **0,30/0,60** *1190*	**0,80/1,60** *445* **0,27/0,54** *1320*	**0,65/1,30** *550* **0,25/0,50** *1425*	**0,55/1,10** *650*	**0,50/1,00** *715*	**0,45/0,90** *790*	*500*	*500*	*1,8/1,5*	*92*

Available standard facewidth's: 500 - 550 - 600 - 650 - 700 - 750 - 800 - 850 - 900 - 950 - 1000 - 1050 - 1100 - 1150 mm
When an electro-mechanical brake is fitted, the minimum facewidth is increased by 100 mm
The total weight of a Drummotor grows approx. 6 kg per 100 mm
Available torque: (Beltpull N x drum diameter m) / 2 Nm

TM 273A40

TM 273A40, mild steel Drummotor with cast iron junctionbox

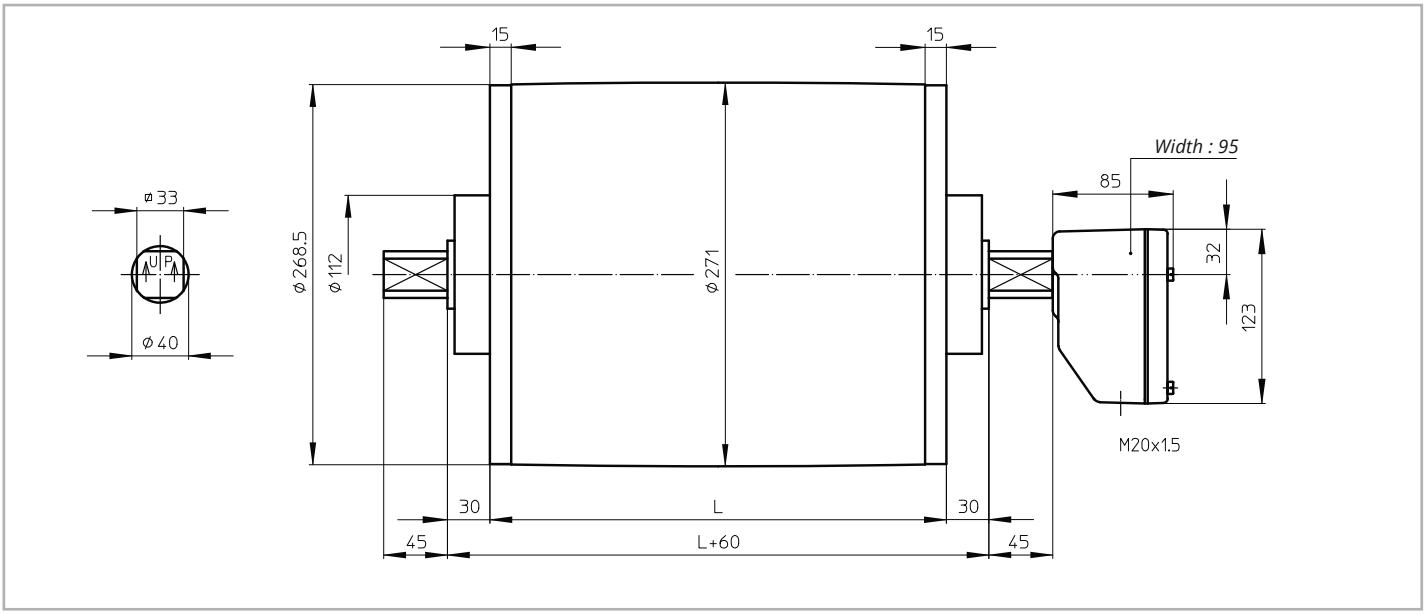

TM 273B40

TM 273B40, mild steel Drummotor with cast iron junctionbox

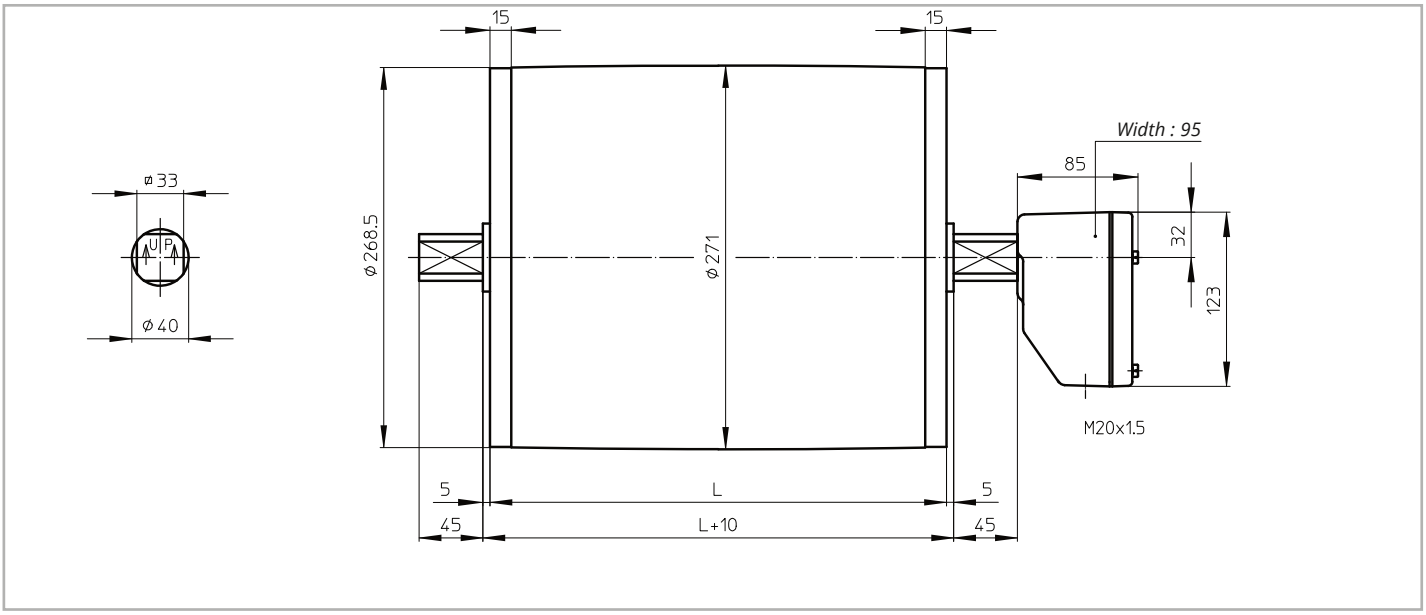

Dimensions Taildrums

KT 273A40

KT 273A40, mild steel Taildrum

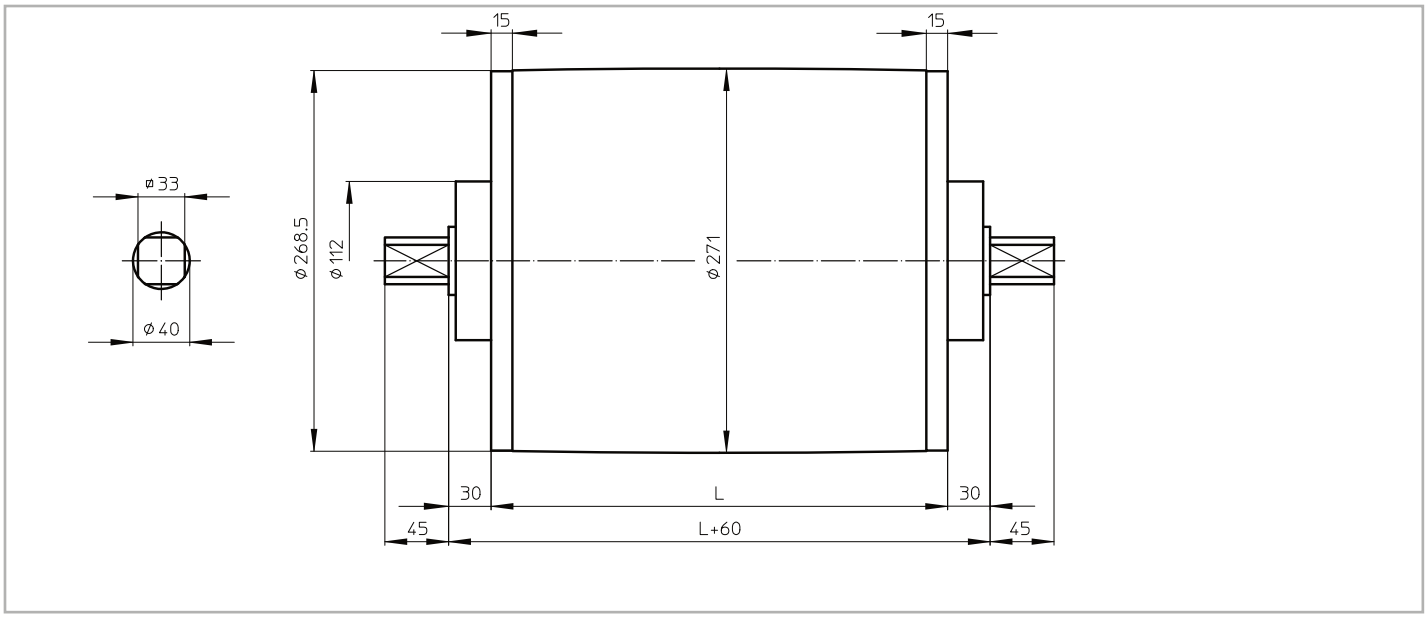

KT 273B40

KT 273B40, mild steel Taildrum

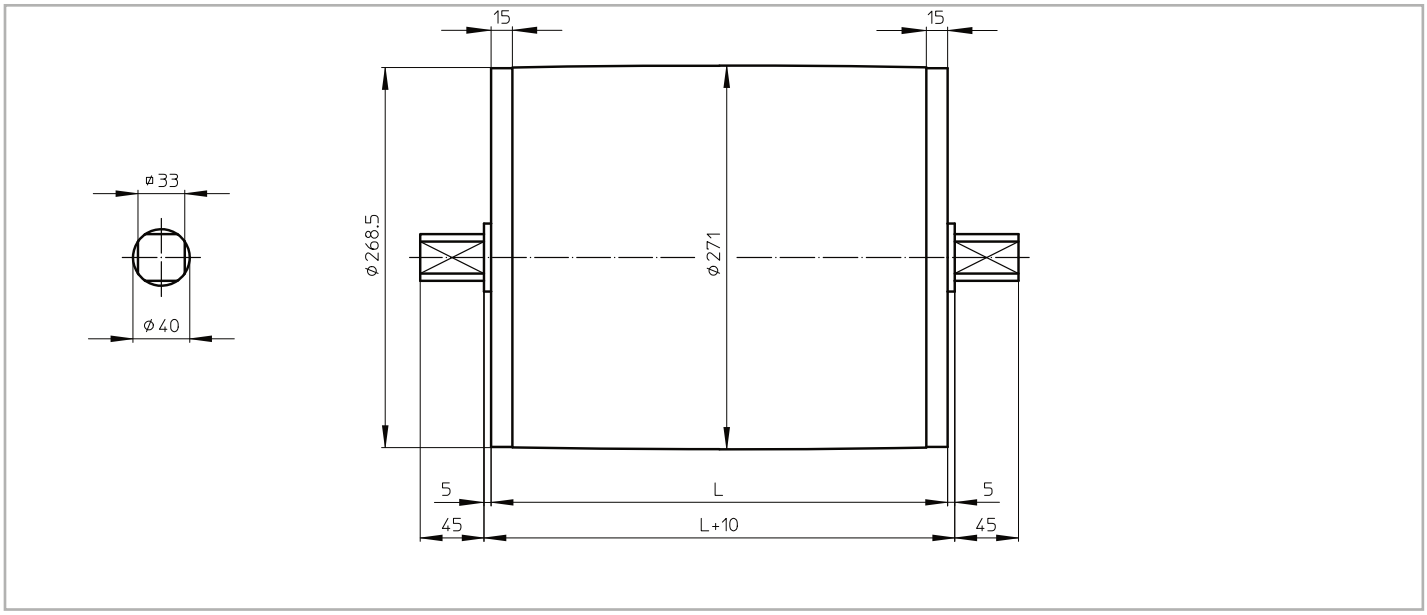

AB 40

AB 40, cast iron or stainless steel bracket
Weight: 4,2 kg per pair

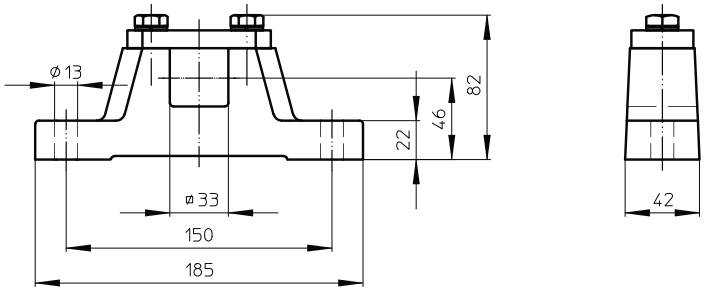

Cable exit

Standard design of a TM 127-25 is with a cast iron junctionbox. For stainless steel design, this can be either a polyamide or stainless steel junctionbox.

On request a Drummotor can be fitted with a cable. In this case it is important to know the available voltage (preferably 1 voltage), the length of the cable, whether the cable is shielded or not and the type of cable exit.

An overview of available cable exits is shown below.

Option 1

Straight cable exit with cable gland

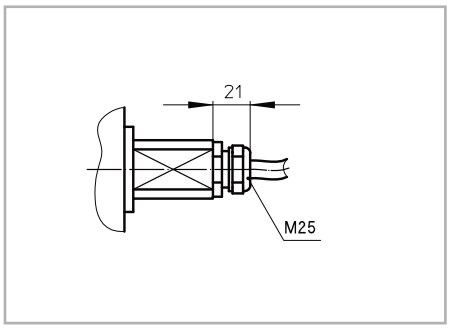

Option 3

Elbow cable exit with cable gland
(minimum facewidth increases with 50 mm)

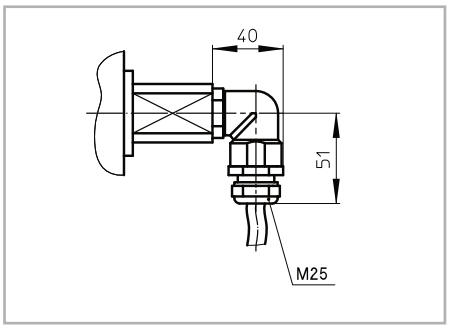

Option 4

Open cable exit (minimum facewidth increases with 50 mm)

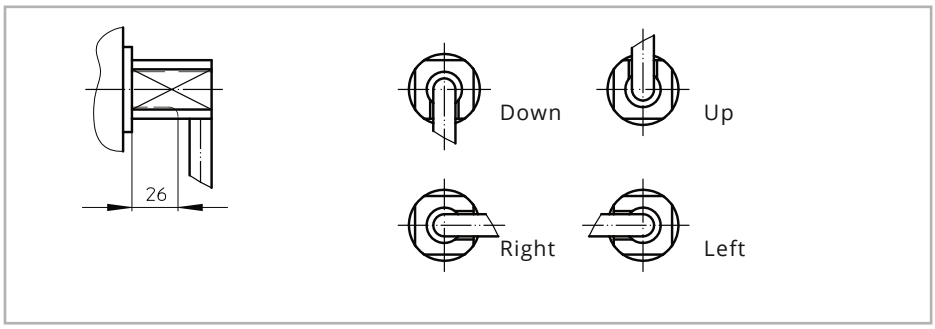

TM 273A40

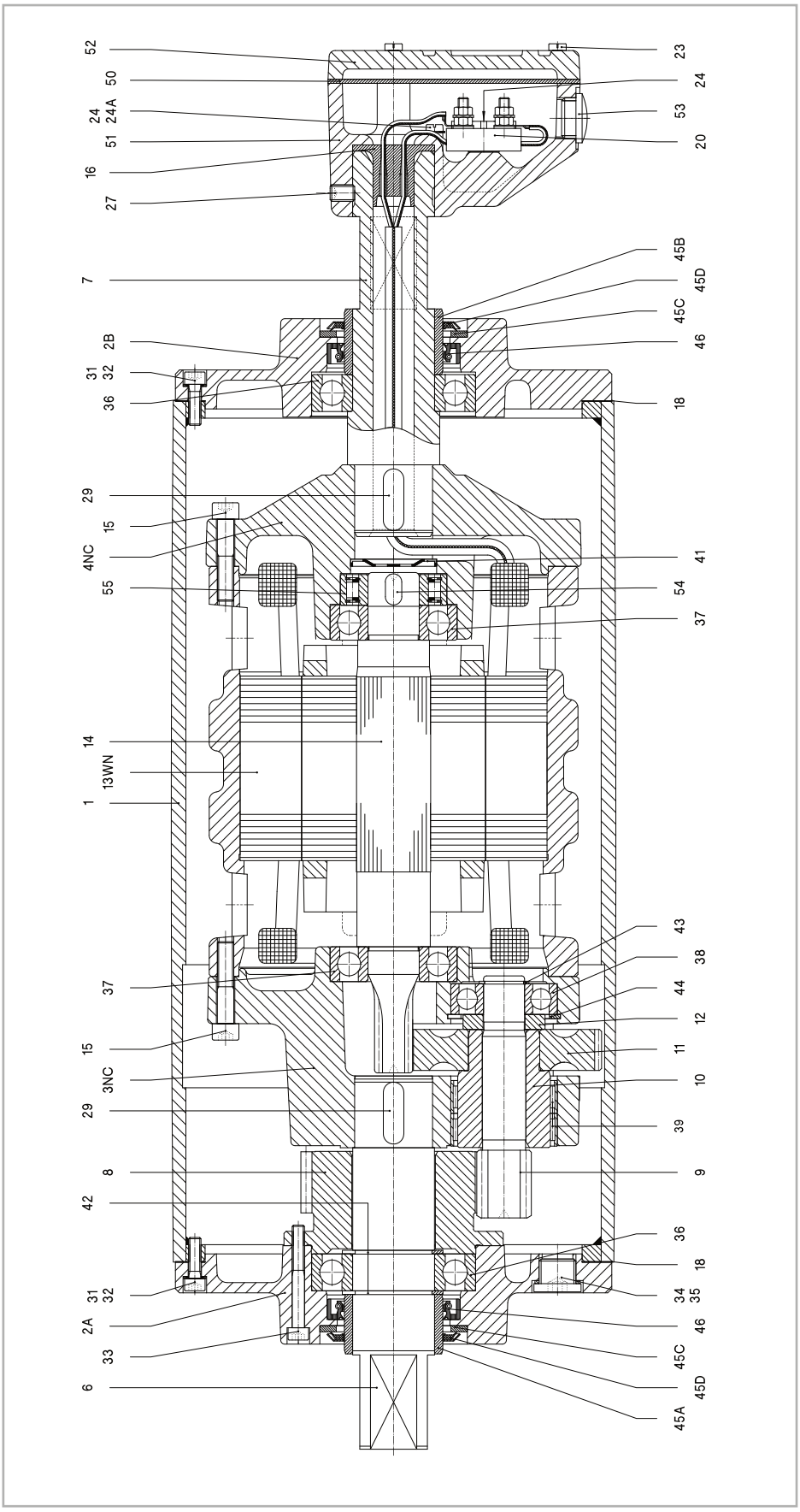

Remark: Drummotor also available in B-design (TM273B40)

Legenda

1 Shell	11 Gear	24 Cyl. head screw36 Ballbearing	45B Bearing race
2A Endflange	12 Distance ring	24A Toothed lock washer37 Ballbearing	46 Oilseal
2B Endflange	13WN Stator	27 Setscrew38 Ballbearing	50 Seal
3NC Gearhousing	14 Rotor	29 Key39 Needlebearing 31 Int. hex screw41 Disc	51 Junctionbox
4NC Motorflange	15 Int. hex screw	32 Washer42 Circlip	52 Junctionbox cover 53
6 Shaftend	16 Cable passage	33 Int. hex screw43 Circlip	Stopping plug
7 Hollow shaft	18 Gasket	34 Fillerplug44 Circlip	54 Key
8 External gear	20 Terminalboard	35 Washer45A Bearing race	55 Backstop
9/10 Pinion with bush	23 Cyl. head screw		57 Dataplate

TM 273A40 Z

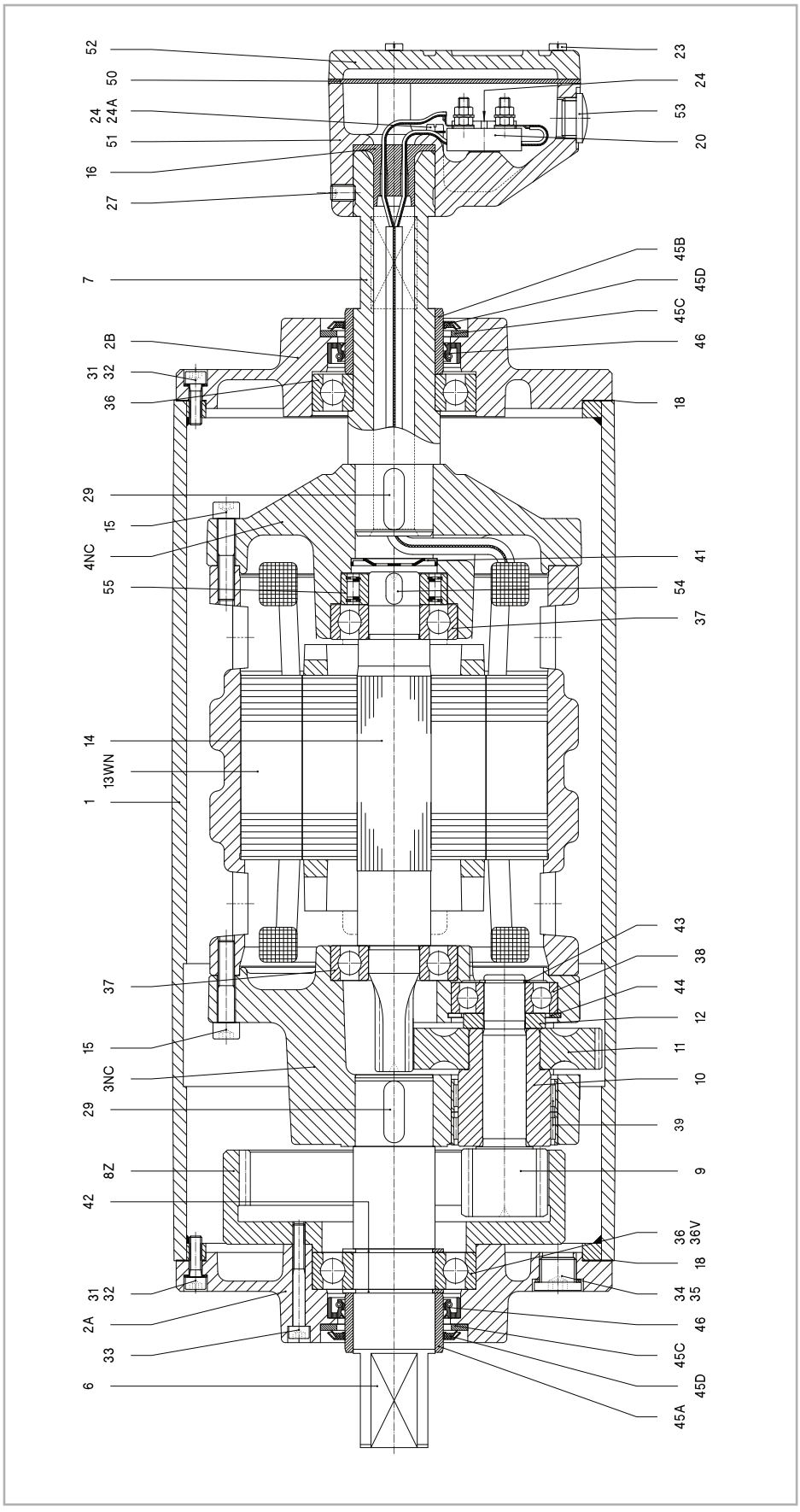

Remark: Drummotor also available in B-design (TM273B40 Z)

Legenda

1 Shell
2A Endflange
2B Endflange
3NC Gearhousing
4NC Motorflange
6 Shaftend
7 Hollow shaft
8Z Internal gear
9/10 Pinion with bush 11
Gear
12 Distance ring27 Setscrew
13WN Stator29 Key
14 Rotor31 Int. hex screw
15 Int. hex screw32 Washer
16 Cable passage33 Int. hex screw
18 Gasket34 Fillerplug
20 Terminalboard35 Washer
23 Cyl. head screw36 Ballbearing
24 Cyl. head screw36V Cyl. roller bearing 24A Toothed lock washer37 Ballbearing
38 Ballbearing
39 Needlebearing 41 Disc
42 Circlip
43 Circlip
44 Circlip
45A Bearing race
45B Bearing race
46 Oilseal
50 Seal
51 Junctionbox
52 Junctionbox cover
53 Stopping plug
54 Key
55 Backstop
57 Dataplate

KT 273A40

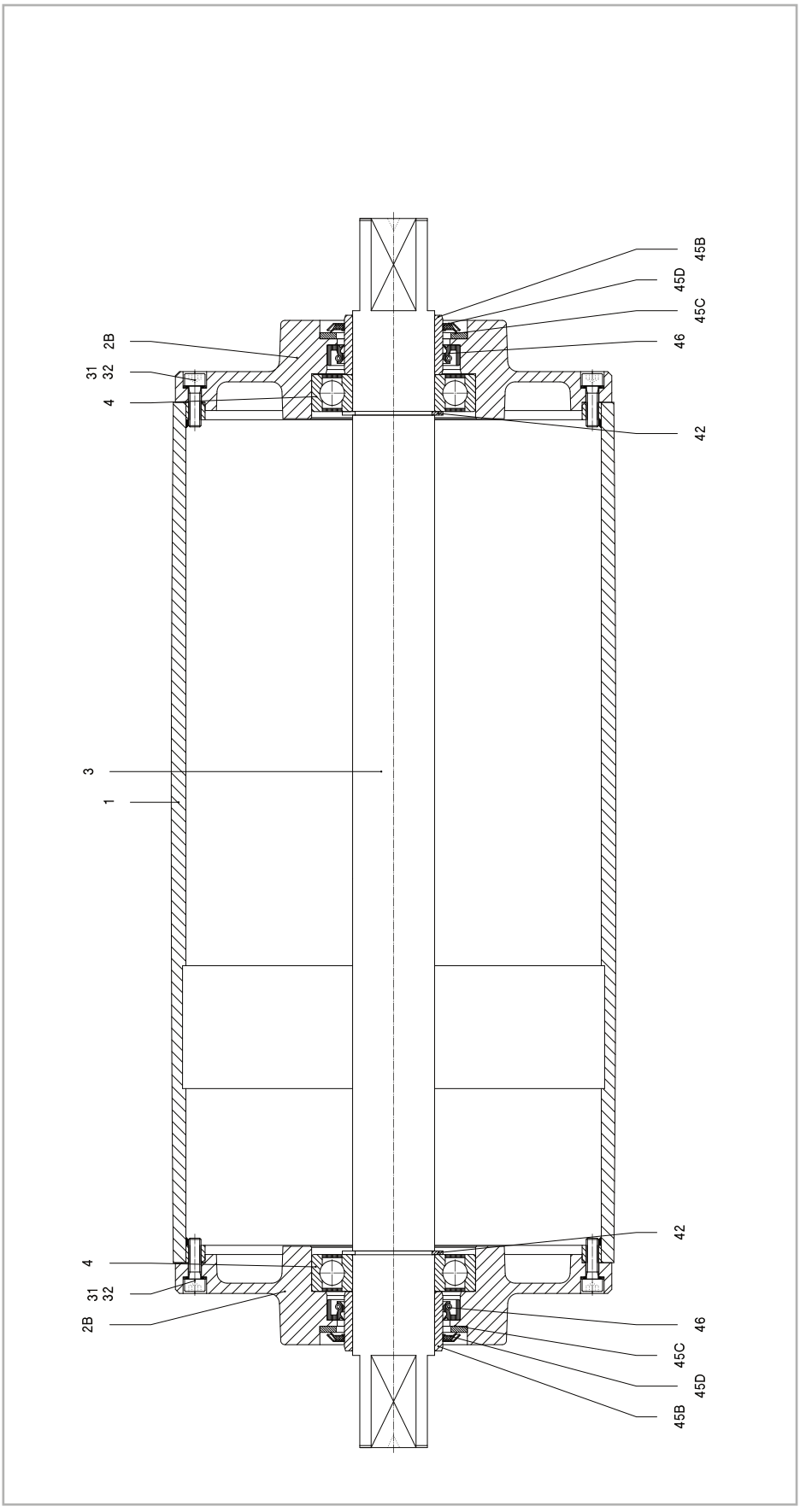

Remark: Taildrum also available in B-design (KT273B40)

Legenda

1	Shell	42	Circlip
2B	Endflange	45B	Bearing race 45C
3	Shaft		Shim plated
4	Ballbearing	45D	Gammaring
31	Int. hex screw	46	Oilseal
32	Washer		

Material

The external parts of the Drummotor are made from mild steel and cast iron. Depending on the application it is also possible to manufacture in stainless steel (complete or part). You can choose between stainless steel 304 (general food industry) and stainless steel 316 (salt water applications).

Backstop - Brake

If an inclined belt conveyor is stopped fully loaded, it could run backwards.

To prevent this we can install a backstop. One of the bearings in the Drummotor is replaced by a one way bearing. The way this bearing is installed determines the direction of rotation of the drum. TBRH indicates a cw rotation and TBLH ccw.

In situations where a Drummotor needs to be able to drive in both directions it is not possible to use a backstop. In this case we use a brake. When an declined belt or a horizontal belt needs to be stopped quickly to pick or place items a brake is the best solution.

Inclined position

Sometimes a Drummotor needs to be installed on an inclined or even vertical position. This is possible, but we need to make adjustments to the oil level in the drum as the oil will flow to the lower side of the Drummotor causing the top bearing to run without lubrication. To prevent problems we will need to know the installation angle so we can fill the drum with extra oil and fit a double sealed bearing on the upper side.

Thermal protection

A Van der Graaf Drummotor can be fitted with thermal protection. This consists of either a thermistor (PTC) or bi-metal (klixon). We install these on each phase of the electric motor.

Encoder - Sensor bearing

In certain applications it is required to measure the speed or position of a conveyor belt. For this type of application we can install an encoder or sensor bearing to accurately measure rotational speed of the Drummotor.

The accuracy needed will determine the type of encoder or sensor used.

Lagging

The power produced by the Drummotor has to be transferred to the belt and lagging is used to give more friction between the Drummotor and the conveyor belt. Van der Graaf can fit your Drummotor with different kinds of lagging.

There is a difference between cold and hot vulcanised lagging. Cold vulcanised means the lagging is glued to the Drummotor usually in sheet form and the join ‘welded’ together. Hot vulcanising is a process where the shell is wrapped around with thin layers of rubber. The shell with the rubber is then baked in an autoclave fusing the layers together creating a seamless finish.

It is possible to cut grooves (e.g chevron or diamond) in the lagging.

Sprockets

Do you wish to use a Drummotor to drive modular belts? Van der Graaf can help you! Fitting sprockets suitable for various types of modular belts is a simple solution. The Drummotor is manufactured with a cylindrical shell and machined with a patented ‘keying’ system. The sprockets are simply ‘slid’ on and locked securely into position.

Sealings for mild steel Drummotors

RBS sealing - IP 66



This sealing is specifically designed for those applications where high water pressure is used for cleaning.

HD sealing - IP 66



This sealing is designed for abrasive applications, like sand, gravel and soil.

Sealings for stainless steel Drummotors

CR sealing - IP 66



This is our standard sealing for stainless steel Drummotors, a very effective, multi labyrinth sealing.

UW sealing - IP 68



This sealing is suitable for under water applications. The maximum depth is approx 2,5 m.

Options

Specification	Standard	Optional
Construction		
Shafts and bolts	Mild	Stainless steel
Endflanges	steel	Stainless steel
Shell	Cast iron	Stainless steel
Junctionbox	Mild steel	Polyamide or stainless steel
Cable		Shielded or non-shielded
Sealing mild steel	Cast iron	RBS, HD
Sealing stainless steel	CR	UW
Shell		
Crowned	•	
Cylindrical		•
Balanced		•
Lagging, cold vulcanised		•
Lagging, hot vulcanised		•
Lagging, FDA approved		•
Fitted with grooves, patterns		•
Electro motor		
Three-phase asynchronous	•	
Power supply (P ≤ 3 kW)	230/400 V - 50 Hz	Other voltages and frequencies on request
Power supply (P > 3 kW)	400/690 V - 50 Hz	Other voltages and frequencies on request
Two speed (Dahlander)		•
Twin drive (double power)		•
Insulation class	F	H
Thermal protection		Bi-metal or thermistor
Run by frequency inverter	•	
Other options		
Food grade oil		•
Backstop, mechanical		•
Brake, electro mechanical		•
Clutch brake, electro mechanical		•
Inclined or vertical position		•
Other facewidth's		•
Different shaft designs		•
Encoder or sensor bearing in Drummotor		•
Encoder or sensor bearing in Taildrum		•
Certificates		
CE	•	
UL		•
CSA		•
ATEX zone 22, dust		•

Our products, an overview

Drummotor type	TM	TM	TM 127.25	TM 138.25	TM 160.25	TM 160.30	TM 215.30	TM 215.40
Drum diameter (mm)	100B25	113B25	127	138	160	160	215	215
Shaft diameter (mm)	100	113	25	25	25	30	30	40
Power (kW)	25	25	0.10-1.1	0.10-1.1	0.10-0.75	0.10-2.2	0.10-2.2	0.37-5.5
Speed (m/s)	0.05-0.37	0.04-0.55	0.008-2.60	0.009-2.80	0.13-3.30	0.06-4.00	0.08-5.30	0.12-4.70
	0.007-3.60	0.008-4.40						

Drummotor type	TM 215B50	TM 273.40	TM 315.40	TM 315.50	TM 400.50	TM 400.60	TM 500.60	TM 500A75
Drum diameter (mm)	215	273	315	315	400	400	500	500
Shaft diameter (mm)	50	40	40	50	50	60	60	75
Power (kW)	1.5-4.0	0.37-5.5	0.37-5.5	1.1-11	1.1-11	1.5-22	1.5-22	11-30
Speed (m/s)	0.18-0.31	0.16-4.95	0.18-5.20	0.16-4.40	0.20-4.80	0.20-4.60	0.25-4.70	0.80-3.20

Drummotor type	TM 620A75	TM 630A100	TM 800A100	TM 800A130
Drum diameter (mm)	620	630	800	800
Shaft diameter (mm)	75	100	100	130
Power (kW)	11-30	22-55	22-55	55-132
Speed (m/s)	1.00-3.90	1.00-4.00	1.25-5.10	1.60-4.50



Design benefi ts

- Robust, industrial design
- Fully enclosed
- Oil fi lled
- Well-sized gears and bearings

Installation advantages

- Easy to install
- Compact and reliable
- Easy to clean
- Virtually maintenance free
- Low Life Cycle Costs

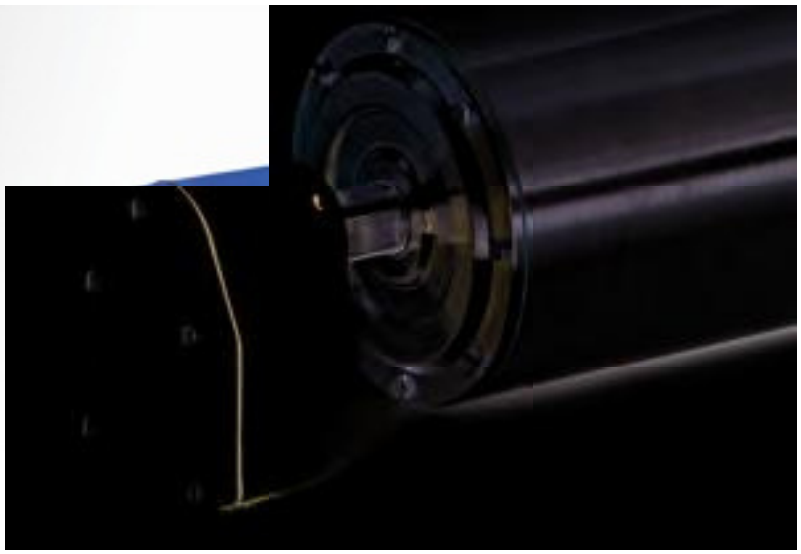

Notes

Notes

Van der Graaf

Power Transmission Equipment

Contact us

Netherlands
Van der Graaf B.V.
De Weijert 14
P.O. Box 3
8325 ZG Vollenhove
Tel: 00 31 527 241441
Fax: 00 31 527 241488
E-mail: info@vandergraafpte.nl
www.vandergraafpte.nl



Canada
Van der Graaf Inc.
2 Van der Graaf Court
Brampton
Ontario L6T 5R6
Tel: 0 0 1 905 793 8100
Fax: 00 1 905 793 812
E-mail: info@vandergraaf.com
www.vandergraaf.com



Great Britain
Van der Graaf U.K. Ltd.
Unit 23, The Metro Centre
Welbeck Way Woodston
Peterborough PE2 7UH
Tel: 00 44 1733 391777
Fax: 00 44 1733 391044
E-mail: sales@vandergraaf.co.uk
www.drummotor.com

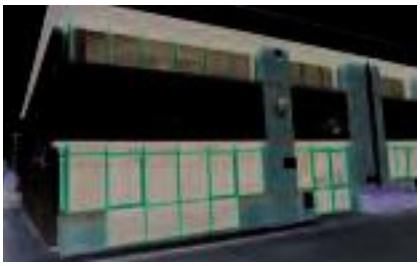

USA
Van der Graaf Corp.
51515 Celeste
Shelby Township
48315 Michigan
Tel: 0 0 1 866 595 3292 Fax:
00 1 888 326 0089



Germany
Van der Graaf GmbH
Rheiner Straße 24 B
48432 Rheine-Mesum
Tel: 00 49 5975 306210
Fax: 00 49 5975 3062120
E-mail: info@vandergraaf.de
www.vandergraaf.de



Sweden
Van der Graaf Scandinavia AB
Spinngatan 2
267 73 Billesholm
Tel: 00 46 42 22 0802 Fax: 00 46
42 22 0803 E-mail:
info@vandergraaf.se
www.vandergraaf.se



Finland
Van der Graaf Scandinavia AB
Tel: 00 358 400 419063
E-mail: info@vandergraaf.fi
www.vandergraaf.fi

ROI
Via 4 Novembre 12/4, 40033, Casalecchio di Reno (BO) ITALIA
Tel:+39.051.592.349 Fax:+39.051.592.352 Email: info@roi-srl.it
www.roi-srl.it